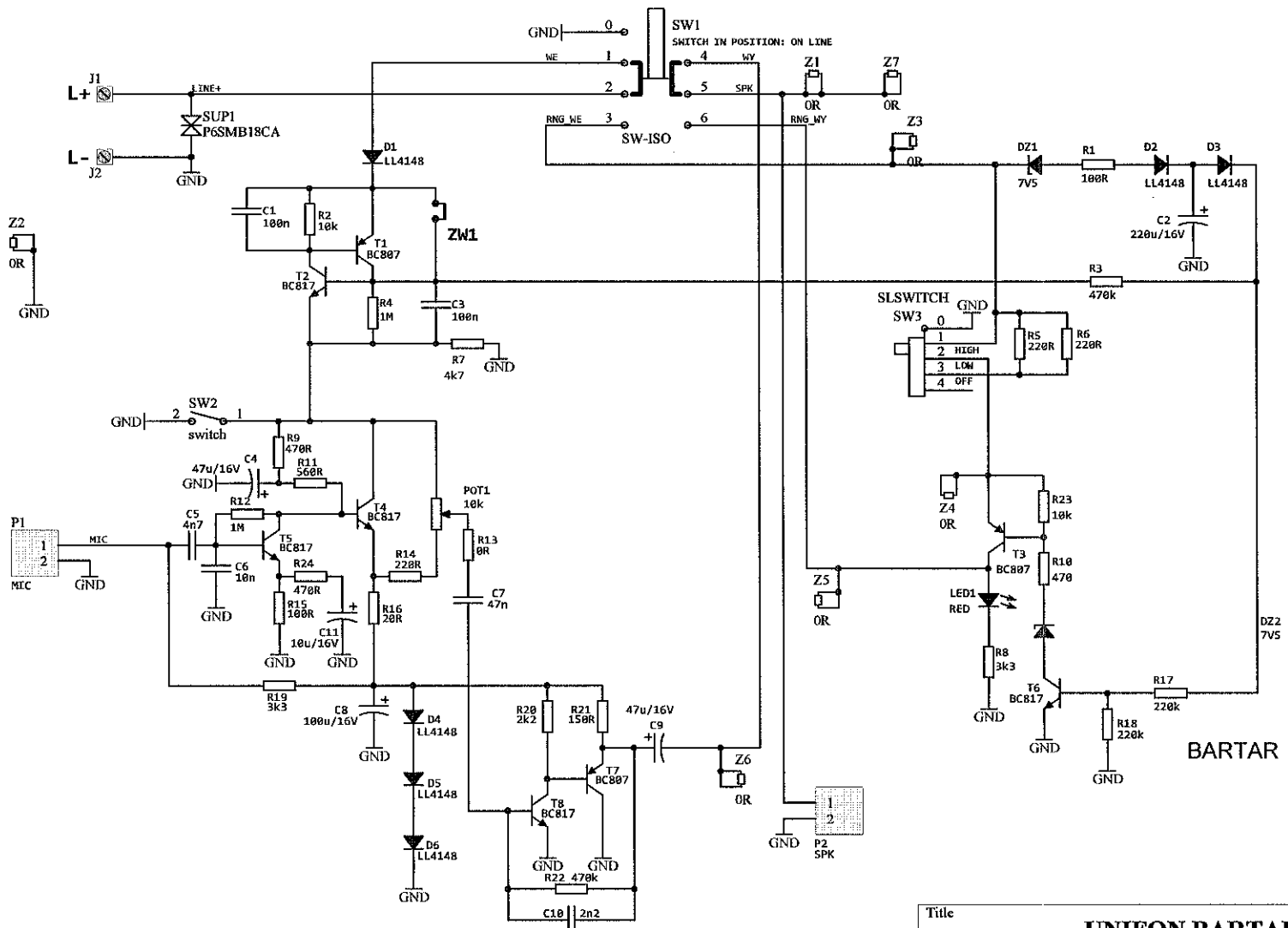


| Title | | |
|---|---|---|
| | **UNIFON BARTAR** | |
| Size: A4 | Number: **1 / 1** | Revision: **2v2** |
| Date: 2013-12-11 | | Sheet of |
| File: C:\ Projects\..\BARTAR-2v2.SchDoc | | Drawn By: |